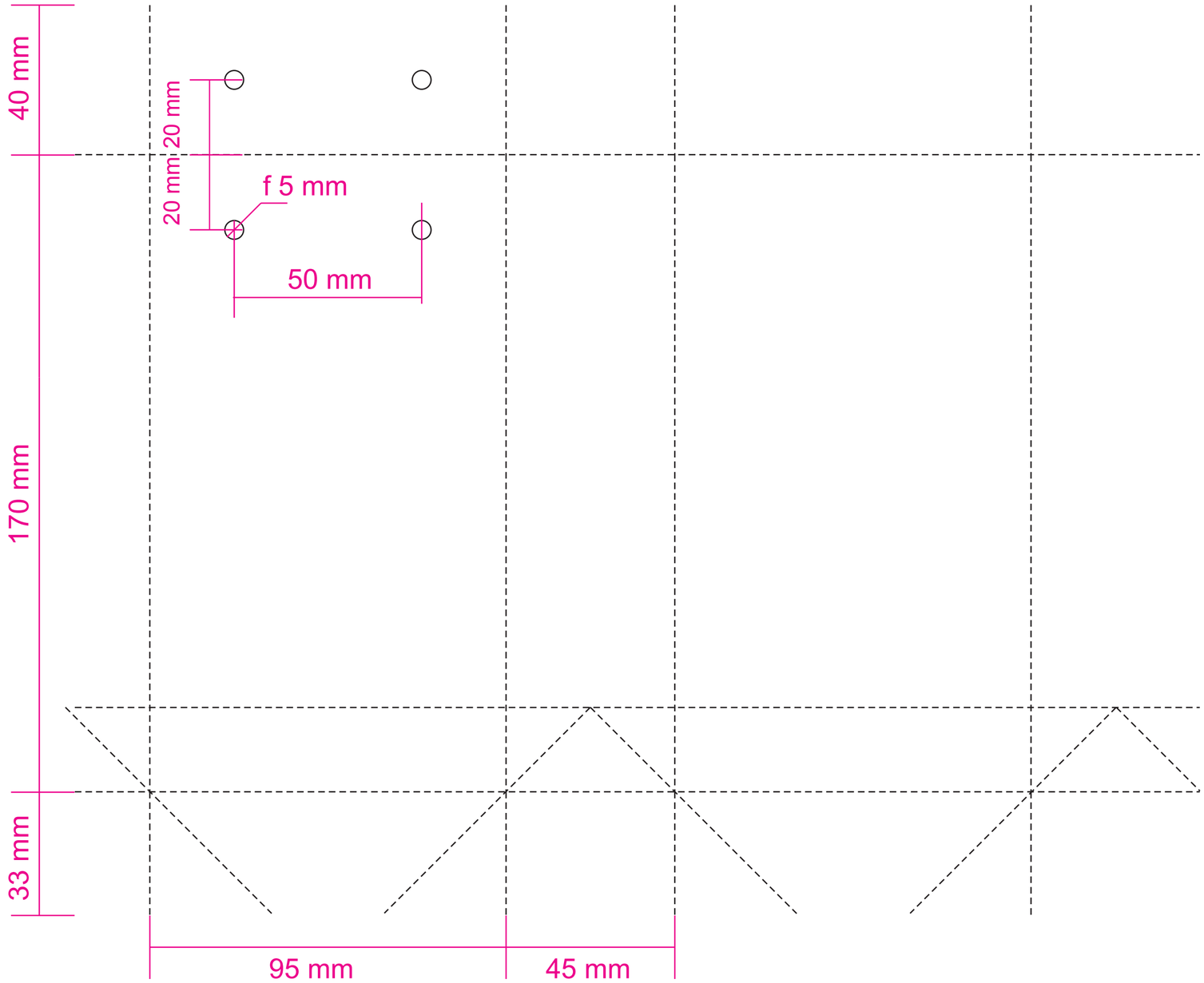

Name:	
Date:	
Size:	
Material:	
Weight:	
Lamination:	
Handle	
Type:	
Material:	
Colour:	
Width:	
Length:	
Add.Features	
Print:	
Colours & Additional Finishes:	

	GUIDE DO NOT PRINT		**Pantone**		**C: M: Y: K:**